AWS Solution Architect Training with
AWS Cloud Practitioner Global Certification

Capstone Projects

Trainer: Aravindraj.G- Nminds Academy

AWS Academy Certified Educator

# 4.Create an EC2 Linux Instance in AWS

Santhu Mohammed M

CSE-Artificial Intelligence & Machine Learning,

Sri Eshwar College of Engineering,

Coimbatore

.

## Objective

EC2 (Elastic Compute Cloud) is a core service provided by Amazon Web Services (AWS) that enables users to rent virtual servers in the cloud to run applications, store data, or handle computational workloads.

An EC2 Linux instance is a virtual machine running the Linux operating system on Amazon Web Services (AWS) EC2 (Elastic Compute Cloud). This allows you to run Windows-based applications, manage Windows Server configurations, and use various Microsoft software (like SQL Server, Apache,FileServer etc.) in the cloud without having to manage physical hardware.

Use Cases for EC2 Linux Instances:

- Web and Application Hosting: Run Apache web servers or other Linux-based web applications in the cloud.
- Database Servers: Host SQL Server databases with EC2 Linux instances, using SSH or EC2 for more control.
- Remote Desktop Applications: Set up SSH (Remote Desktop Services) for remote access to Linux desktops in the cloud.
- Development and Testing: Create development environments with linux OS to test php,MySql or other Linux-based applications.

Used Services in AWS

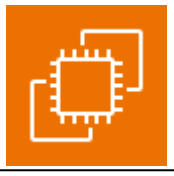

Amazon EC2

Topology :

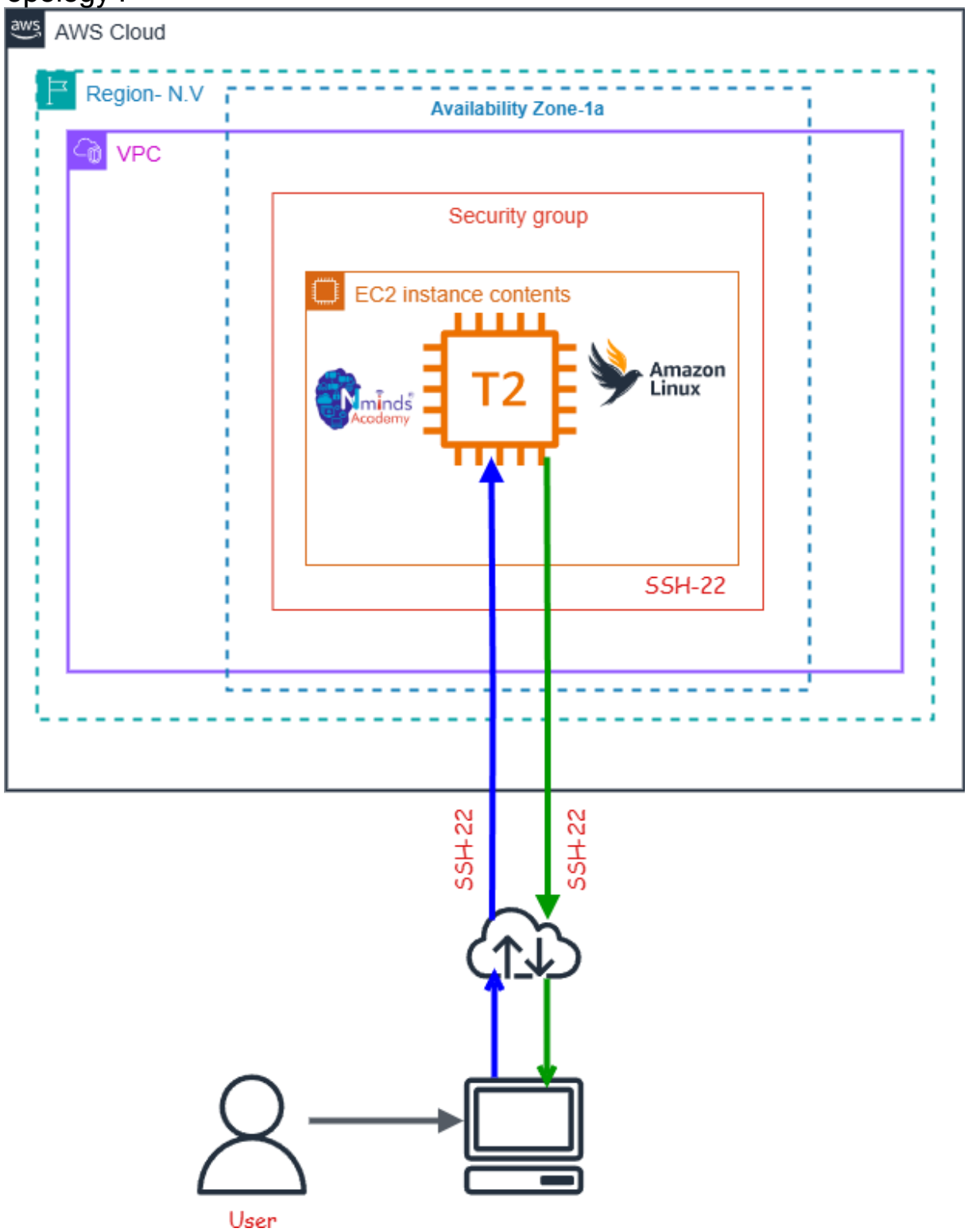
AWS Cloud
Region- N.V
Availability Zone-1a
VPC
Security group
EC2 instance contents
T2
Amazon Linux
SSH-22
SSH-22
SSH-22
User

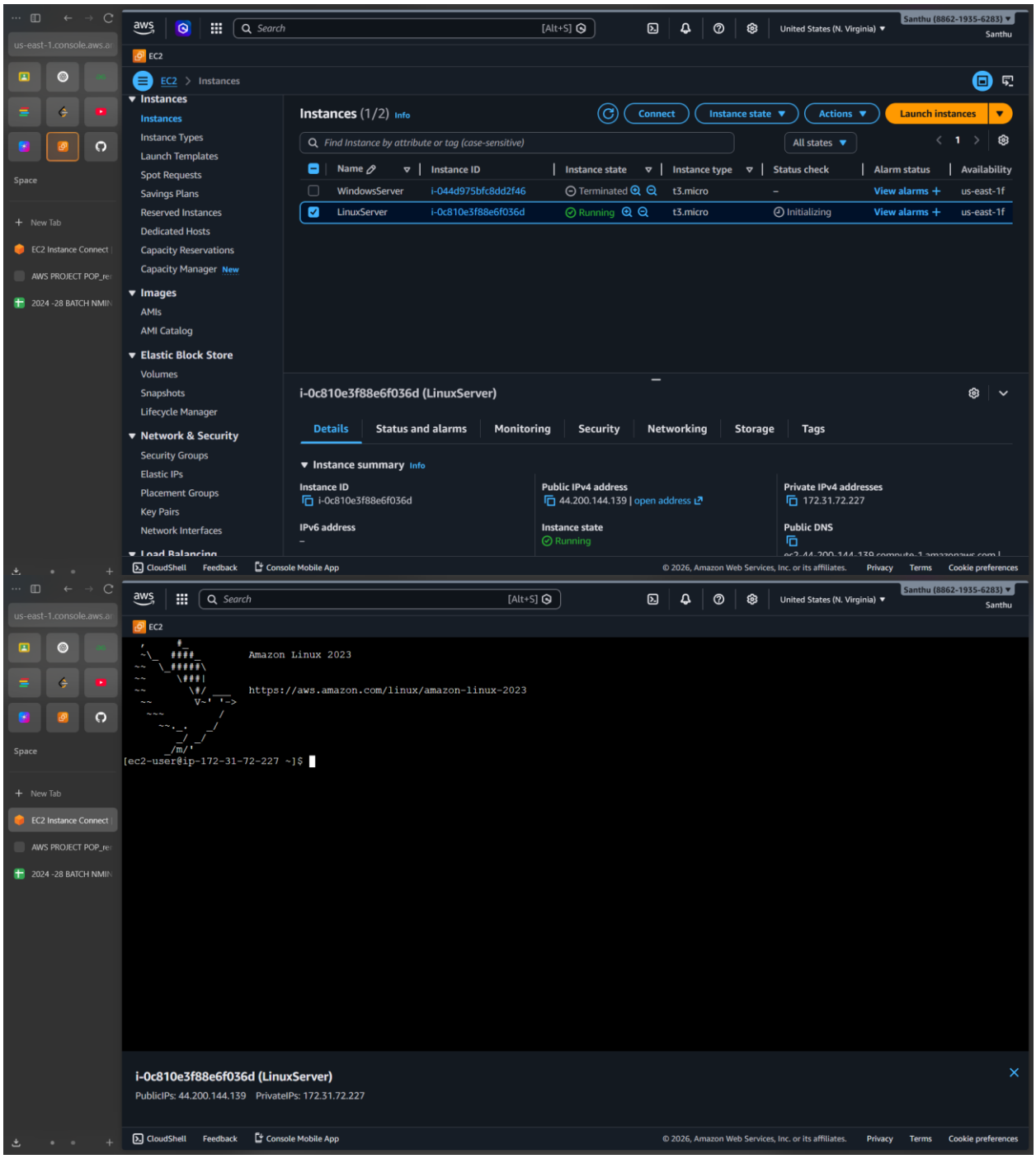
Instances (1/2) Info
Connect
Instance state
Actions
Launch instances
Find Instance by attribute or tag (case-sensitive)
All states
Name
Instance ID
Instance state
Instance type
Status check
Alarm status
Availability
WindowsServer
i-044d975bfc8dd2f46
Terminated
t3.micro
View alarms
us-east-1f
LinuxServer
i-0c810e3f88e6f036d
Running
t3.micro
Initializing
View alarms
us-east-1f
i-0c810e3f88e6f036d (LinuxServer)
Details
Status and alarms
Monitoring
Security
Networking
Storage
Tags
Instance summary
Instance ID
i-0c810e3f88e6f036d
Public IPv4 address
44.200.144.139 | open address
Private IPv4 addresses
172.31.72.227
IPv6 address
Instance state
Running
Public DNS
Amazon Linux 2023
https://aws.amazon.com/linux/amazon-linux-2023
[ec2-user@ip-172-31-72-227 ~]$
i-0c810e3f88e6f036d (LinuxServer)
PublicIPs: 44.200.144.139 PrivateIPs: 172.31.72.227

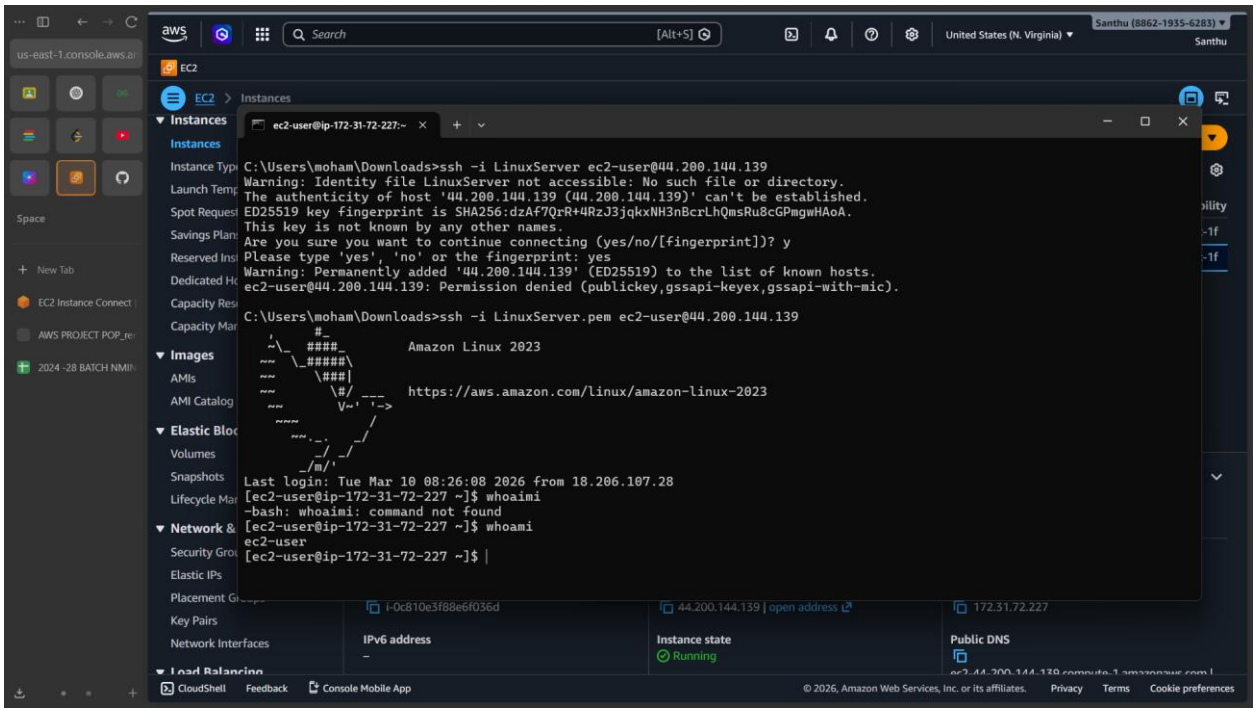
C:\Users\moham\Downloads>ssh -i LinuxServer ec2-user@44.200.144.139
Warning: Identity file LinuxServer not accessible: No such file or directory.
The authenticity of host '44.200.144.139 (44.200.144.139)' can't be established.
ED25519 key fingerprint is SHA256:dzAf7QrR+4RzJ3jqkxNH3nBcrLhQmsRu8cGPmgwHAoA.
This key is not known by any other names.
Are you sure you want to continue connecting (yes/no/[fingerprint])? y
Please type 'yes', 'no' or the fingerprint: yes
Warning: Permanently added '44.200.144.139' (ED25519) to the list of known hosts.
ec2-user@44.200.144.139: Permission denied (publickey,gssapi-keyex,gssapi-with-mic).
C:\Users\moham\Downloads>ssh -i LinuxServer.pem ec2-user@44.200.144.139
Amazon Linux 2023
https://aws.amazon.com/linux/amazon-linux-2023
Last login: Tue Mar 10 08:26:08 2026 from 18.206.107.28
[ec2-user@ip-172-31-72-227 ~]$ whoaimi
-bash: whoaimi: command not found
[ec2-user@ip-172-31-72-227 ~]$ whoami
ec2-user
[ec2-user@ip-172-31-72-227 ~]$